CUSTOMER DRAWING

| REV. | DESCRIPTION | DESIGN | APRROVAL | DATE |
|---|---|---|---|---|
| A1 | INITIAL RELEASE | Haojin Sun | Rongzhe Guo | 2026.07.10 |
| | | | | |

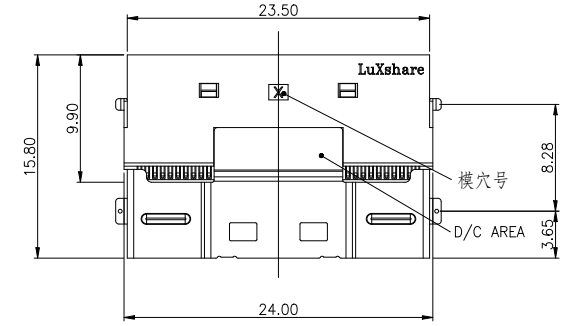


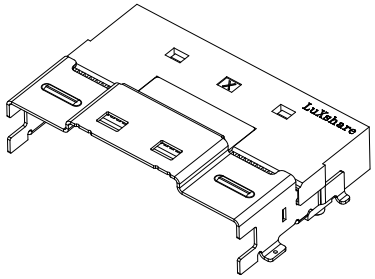


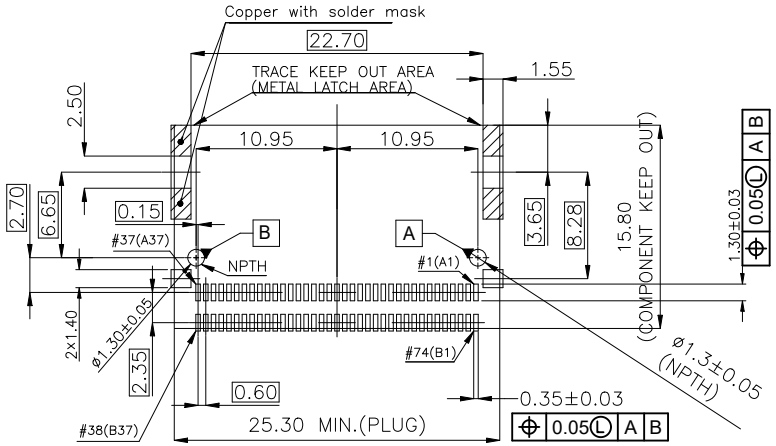


RECOMMENDED PCB LAYOUT
ALL DIMENSIONS TOLERENCE IS 0.05
TOP VIEW

连接器中接地PIN不串接（不共地）

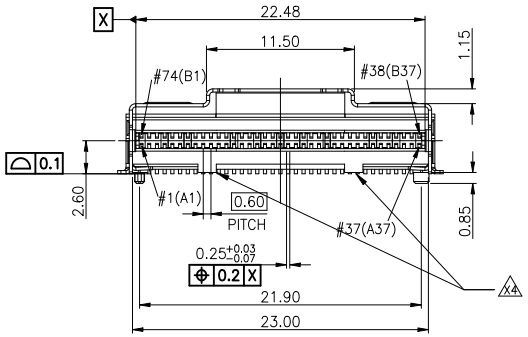


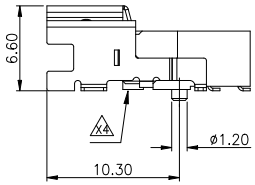


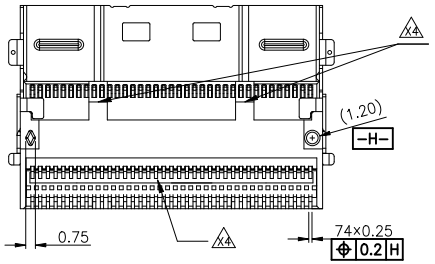


NOTES:
1. MATERIAL:
1.1 HOUSING: LCP, UL94V-0; COLOR: BLACK
1.2 CONTACT: COPPER ALLOY.
1.3 LATCH: STAINLESS STEEL.
2. FINISH:
2.1 CONTACT:
50u" MIN. NICKEL PLATING OVERALL.
15u" or 30u" MIN. GOLD ON CONTACT AREA.
100u" MIN. MATT TIN PLATING ON SOLDER TAIL.
2.2 LATCH:
100u" MIN. Sn PLATING ON SOLDER AREA.

3. HALOGEN-FREE PRODUCT P/N:
PSL060-744 * -T 4 A- 1 H
CONTACT AREA PLATING:
3: 30u" GOLD ON CONTACT AREA.
7: 15u" GOLD ON CONTACT AREA.
PACKAGE METHOD:
1: TAPE & REEL

| | |
|---|---|
| X.± 1 | X.°±3° |
| .X± 0.30 | .X°±2° |
| .XX± 0.20 | .XX°±1° |
| .XXX± 0.10 | .XXX°±0.5° |
| UNITS: | mm |

THESE DRAWINGS AND SPECIFICATIONS ARE THE PROPERTY OF LUXSHARETECH AND SHALL NOT BE REPRODUCED, COPIED OR CUED IN ANY MANNER WITHOUT THE PRIOR WRITTEN CONSENT OF LUXSHARETECH

PART NO.: PSL060-744 * -T4A-1H

TITLE: SLIMSAS X8 R/A RECEPTACLE 74 POSITION

APPD: Rongzhe Guo

CHKD: Hengshan Cheng

DRAW: Haojin Sun 2026.07.10

LUXSHARETECH

CUSTOMER P/N: N/A

DWG NO: PSL060-7443-T4A-1H

| SCALE | SHEET | REV. |
|---|---|---|
| 1:1 | 1/1 | A1 |

CUSTOMER DRAWING

| REV. | DESCRIPTION | DESIGN | APRROVAL | DATE |
|---|---|---|---|---|
| | | | | |
| | | | | |

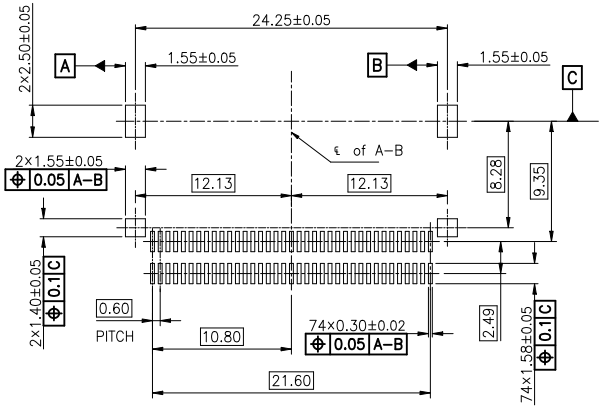


RECOMMENDED STEEL MESH DIMENSIONS
ALL DIMENSIONS TOLERENCE IS 0.05

TOP VIEW

| | |
|---|---|
| X.± 1 | X.°±3° |
| .X± 0.30 | .X°±2° |
| .XX± 0.20 | .XX°±1° |
| .XXX± 0.10 | .XXX°±0.5° |
| UNITS: | mm |

THESE DRAWINGS AND SPECIFICATIONS ARE THE PROPERTY OF LUXSHARETECH AND SHALL NOT BE REPRODUCED, COPIED OR CUED IN ANY MANNER WITHOUT THE PRIOR WRITTEN CONSENT OF LUXSHARETECH

PART NO.: PSL060-744 X -T4A-1H

TITLE: SLIMSAS X8 R/A RECEPTACLE 74 POSITION

APPD: Rongzhe Guo

CHKD: Hengshan Cheng

DRAW: Haojin Sun 2026.07.10

LUXSHARETECH

CUSTOMER P/N: N/A

DWG NO: PSL060-7443-T4A-1H-01

| SCALE | SHEET | REV. |
|---|---|---|
| 1:1 | 1/1 | A1 |